DRAPER®

230V 20L WET AND DRY

VACUUM CLEANER

20515

SPARE PARTS DRAWING SHEET

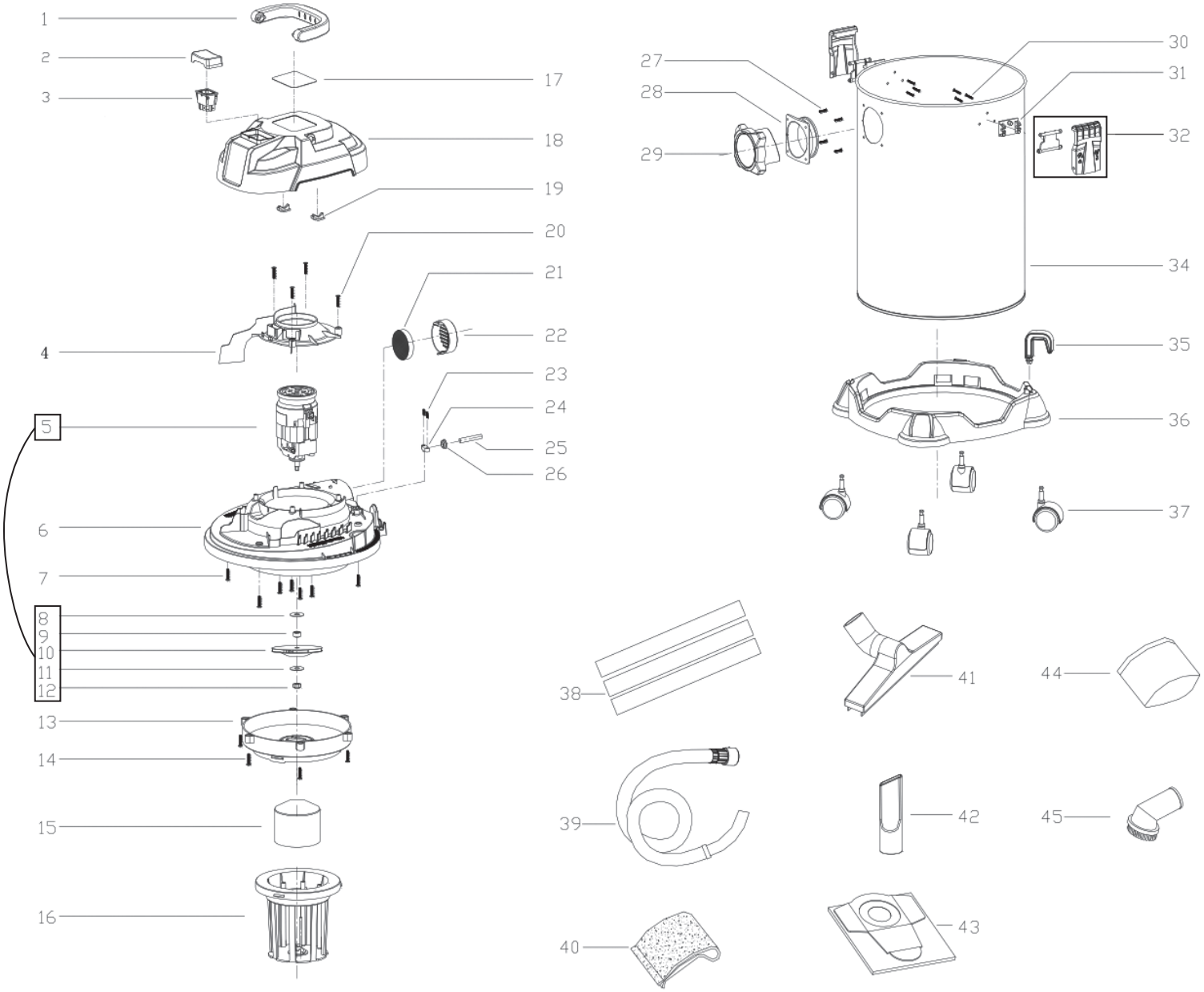

Helpline: (023) 8049 4344. **Sales Desk:** (023) 8049 4333. **General Enquiries:** (023) 8026 6355.

DRAPER TOOLS LTD, HURSLEY ROAD, CHANDLER'S FORD, EASTLEIGH, HANTS. SO53 1YF. U.K website: drapertools.com e-mail: sales@drapertools.com

JLLJ0318

DRAPER®

230V 20L WET AND DRY VACUUM CLEANER

20515

SPARE PARTS LISTING SHEET

KEY No.	PART No.	STOCK No.	DESCRIPTION
1	YWDVSS-1	66256	Handle
2	YWDVSS-2	66260	Switch push button
3	YWDVSS-3	66261	Switch
4	YWDVSS-4	66263	Motor top cover
4	YWDVSS-4A	81940	Motor top cover (B/C 195551 onwards)
5	YWDVSS-5	66264	Motor
5	YWDVSS-5A	81941	Motor (B/C 195551 onwards)
6	YWDVSS-6	66265	Motor base cover
6	YWDVSS-6A	81952	Motor base cover (B/C 195551 onwards)
7	YWDVSS-7	66266	Screw
8		see no.5	Washer
9		see no.5	Bushing
10		see no.5	Fan
11		see no.5	Washer
12		see no.5	Nut
13	YWDVSS-13	66341	Air inlet grid
14	YWDVSS-14	66425	Screw
15	YWDVSS-15	66461	Floating block
16	YWDVSS-16	66463	Filter support
17	YWDVSS-17	66470	Name plate
18	YWDVSS-18	66474	Top cover
19	YWDVSS-19	66553	Stopple
20	YWDVSS-20	66619	Screw
21	YWDVSS-21	66625	Air outlet foam

KEY No.	PART No.	STOCK No.	DESCRIPTION
22	YWDVSS-22	66626	Air outlet plate
23	YWDVSS-23	66627	Screw
24	YWDVSS-24	66641	Power cord plate
25	YWDVSS-25	66757	Power cord
26	YWDVSS-26	66768	Power cord sheathing
27	YWDVSS-27	66771	Screw
28	YWDVSS-28	66772	Suction connection plate
29	YWDVSS-29	66784	Suction connection
30	YWDVSS-30	66813	Screw
31	YWDVSS-31	66822	Clip base
32	YWDVSS-31A	02146	Clip
34	YWDV20SS-34	66846	Tank-20L
35	YWDVSS-35	66861	Cord hook
36	YWDVSS-36	66878	Tank base
37	YWDVSS-37	67124	Wheel
43	AWDVSS-43	67794	Tube
44	AWDVSS-44	67812	Hose
45	AWDVSS-45	67818	Filter foam
46	AWDVSS-46	67819	Wet brush
47	AWDVSS-47	67999	Crevice tool
48	AWDVSS-48	68015	Paper bag (3-pack)
49	AWDVSS-49	68049	Cloth filter
50	AWDVSS-50	68301	Round brush

Helpline: (023) 8049 4344. **Sales Desk:** (023) 8049 4333. **General Enquiries:** (023) 8026 6355.

DRAPER TOOLS LTD, HURSLEY ROAD, CHANDLER'S FORD, EASTLEIGH, HANTS. SO53 1YF. U.K website: drapertools.com e-mail: sales@drapertools.com

JLLJ0318