DRAPER®
THE TOOL COMPANY

1600KG WIRE ROPE PULLER

■ STOCK No.71208. ■ PART No.WRP1.

SPARE PARTS LISTING & ASSEMBLY DRAWING 02/2003

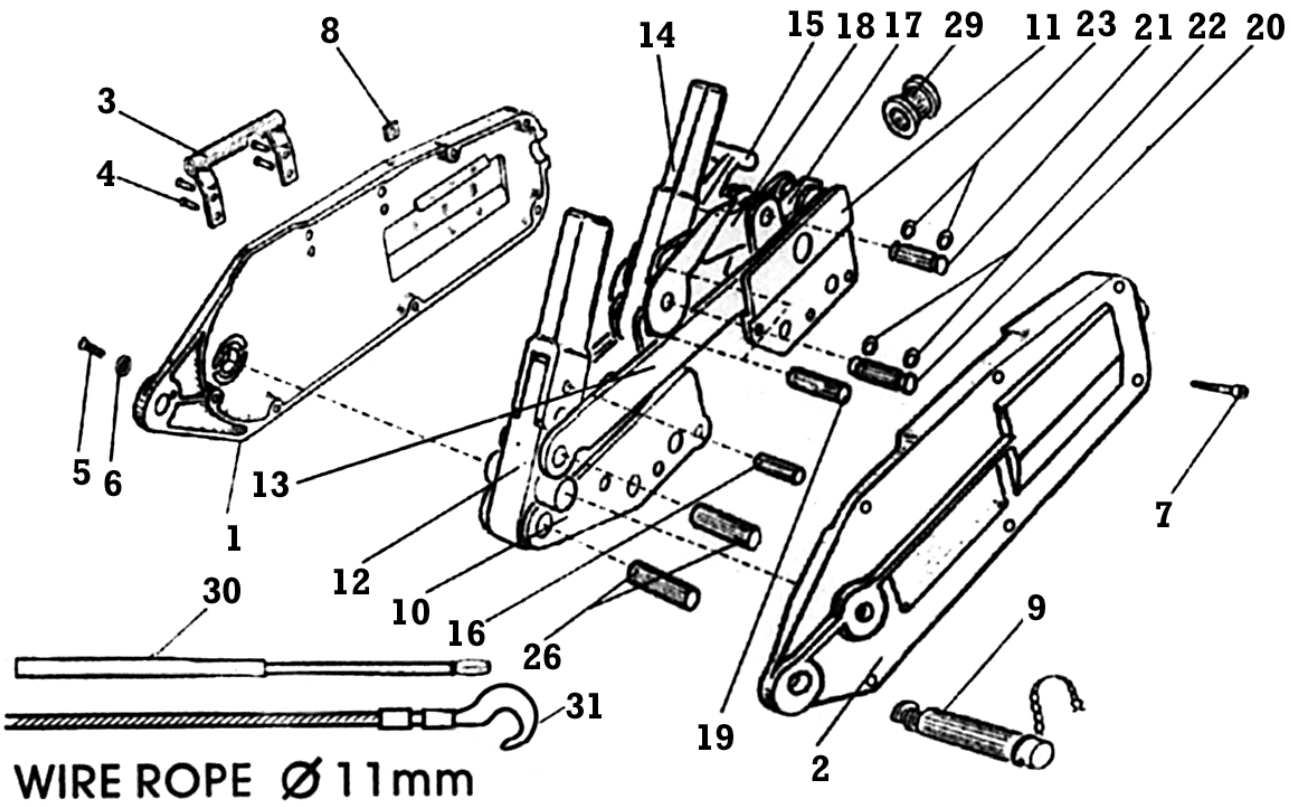

KEY No.	PART No.	STOCK No.	DESCRIPTION
1	YWRP1-01	71327	Left hand plate
2	YWRP1-02	71328	Right hand plate
3	YWRP1-03	71329	Handle
4	YWRP1-04	71330	Rivet
5	YWRP1-05	71331	Hex-Washer
6	YWRP1-06	71332	Spring Washer
7	YWRP1-07	71333	Hex-Bolt
8	YWRP1-08	71334	Hex-Nut
9	YWRP1-09	71335	Anchor bolt
10	YWRP1-10	71336	Front Jaw Block
11	YWRP1-11	71337	Back Jaw Block
12	YWRP1-12	71338	Forward handle
13	YWRP1-13	71339	Long Connecting Rod
14	YWRP1-14	71340	Reverse handle
15	YWRP1-15	71341	Relax lever
16	YWRP1-16	71342	Safety bolt
17	YWRP1-17	71343	Upper grip jaw
18	YWRP1-18	71344	Connecting rod

KEY No.	PART No.	STOCK No.	DESCRIPTION
19	YWRP1-19	71345	Pin
20	YWRP1-20	71346	Pin
21	YWRP1-21	71347	Pin
22	YWRP1-22	71348	Bush
23	YWRP1-23	71349	Bush
26	YWRP1-26	71350	Connect rod
29	YWRP1-29	71351	Guide tube
30	YWRP1-30	71352	Extendable handle
31	YWRP1-31	71323	Wire Rope W/Hook

DRAPER TOOLS LTD, HURSLEY ROAD, CHANDLER'S FORD, EASTLEIGH, HANTS. SO53 1YF. U.K. www.draper.co.uk e-mail: sales@draper.co.uk